VOLVO P 1800

VOLVO
P1800

The Volvo P 1800 is a car that attracts attention through the sheer beauty o f its handsome lines and its effortless sparkling performance both in dense city traffic and on the open highway. The power unit in this graceful and luxurious car is a thoroughbred one hundred horse power unit driving through a fully synchronized gearbox while the suspension is well in keeping with the technical perfection of the power system. The Volvo P 1800 is the natural choice of those who make outstanding demands on luxurious comfort, relaxed safety and complete reliability. The faultless road-holding qualities of this car together with safety details such as disc brakes on the _front wheels, safety belts and padded dash-board make long-distance driving sheer enjoyment. To drive the Volvo P 1800 with its carefully planned interior appointments, clearly visible instrumentation and conveniently located controls is an exhilarating ex-perience. This car is also designed for varying climatic conditions since the body is very effectively rust proofed and standard equipment includes a powerful heater-defroster and two separate air intakes as well as electric windscreen wipers and washers. The Volvo P 1800 makes your everyday driving a pleasure and your leisure motoring is the unique experience of handling a car with superb performance and with effortless power at your command.

a short Presentation of the P 1800

100 h.p. sports engine with twin carburetters a)

Disc brakes b)

Braced-tread, 165-15 sports tyres c)

12-volt battery d)

Fully synchronized four-speed gearbox e)

Padded dashboard f)

Dazzle-free rear view mirror g)

Loud-tone horn h)

Headlight flasher I)

Overdrive (optional extra) k)

Separate bucket seats I)

Two occasional seats m)

Parcel shelves n)

Drum brakes o)

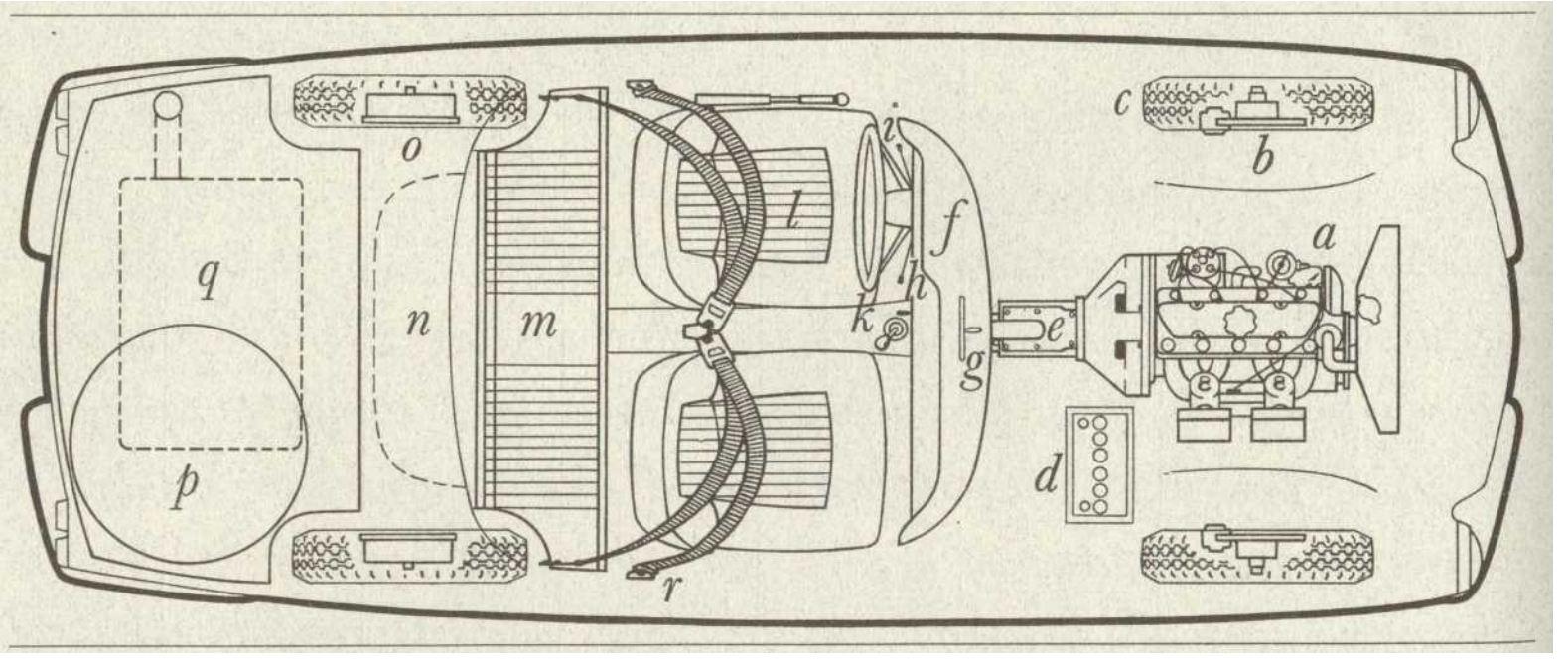

Spare wheel p)

Fuel tank (10 Imp. galls = 12 US galls.) q)

Safety belts r)

P1800

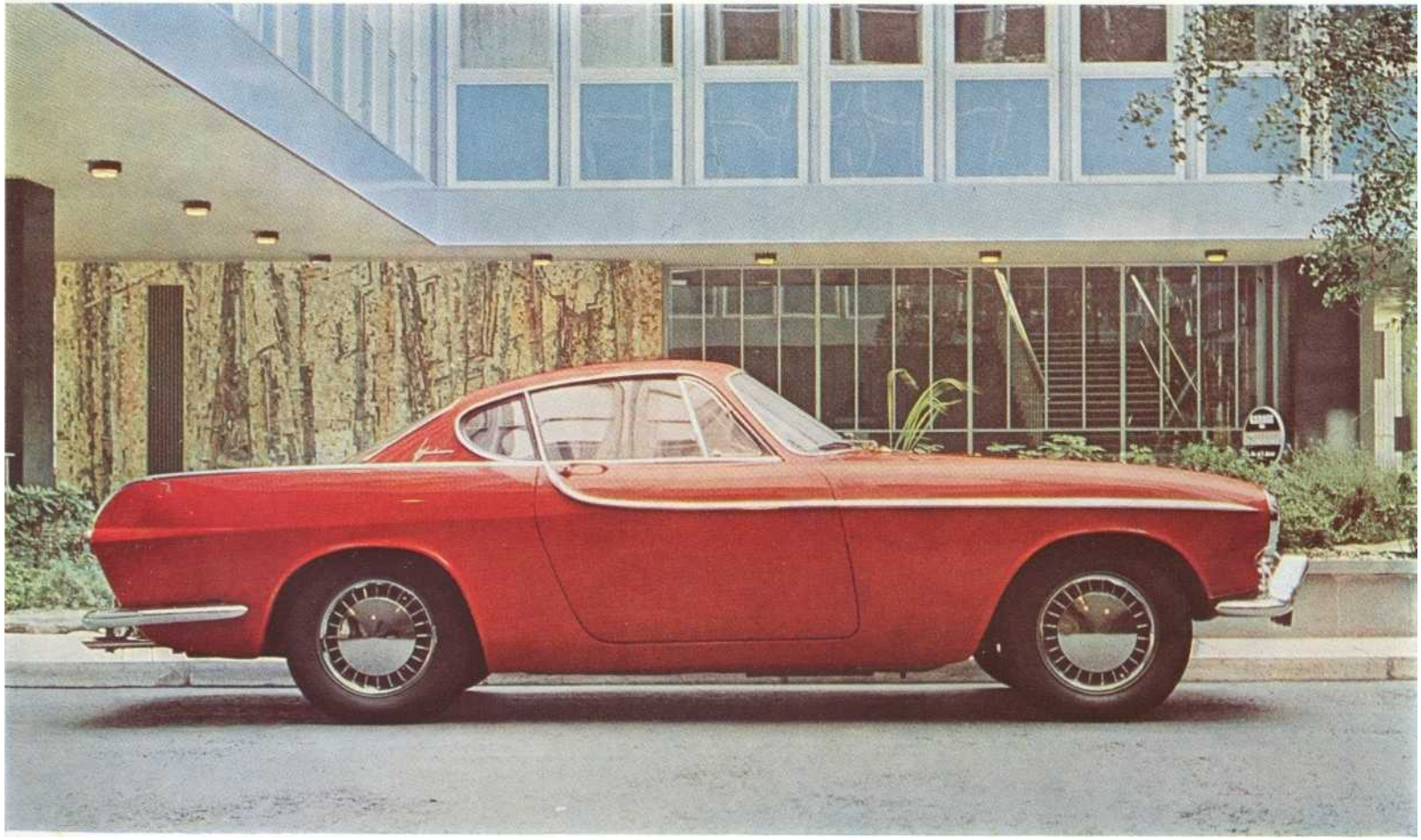

P 1800

The Volvo P 1800 is a truly distinguished car, expressly designed and built to satisfy the most stringent demands made by those discerning people who are satisfied by nothing but the best quality, styling and performance.

comprehensive instrumentation

Switch for internal lighting a)
Choke b)
Control for fresh air intake c)
Windscreen wipers and washers d)
Lighting and instrument lighting e)
Revolution counter f)
Water and oil temperature gauges g)
Speedometer with: h)
mileometer
trip meter
Warning lamp for charging
Warning lamp for headlight beams
Warning lamp for direction indicator flashers
Fuel gauge i)
Oil pressure gauge k)
Clock I)
Warning lamp for overdrive m)
Ignition switch n)
Fan o)
Heater-defroster controls p)
Switch for overdrive q)
Cigarette lighter r)
Control for fresh air intake s)
Switch for map-reading lamp t)

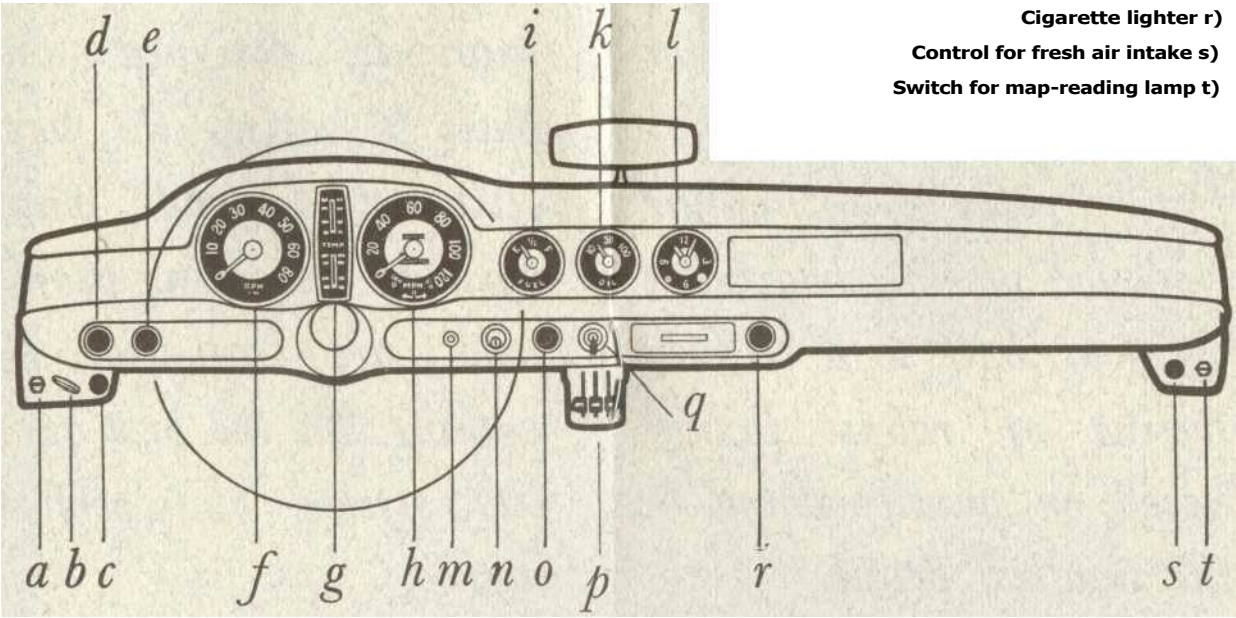

The comfortable front seats can easily be adjusted for your own individual requirements while the broad armrests on the doors also contribute to relaxed driving. There are two occasional rear seats and also two parcel shelves.

To travel in a Volvo P 1800 is to experience motoring at its very best. The soft, but, at the same time, firm suspension, outstanding road-holding and the perfectly designed interior fittings which are in perfect harmony with the lithe elegance of the bodywork all contribute to a relaxed feeling of robust luxury based on quality down to the smallest detail.

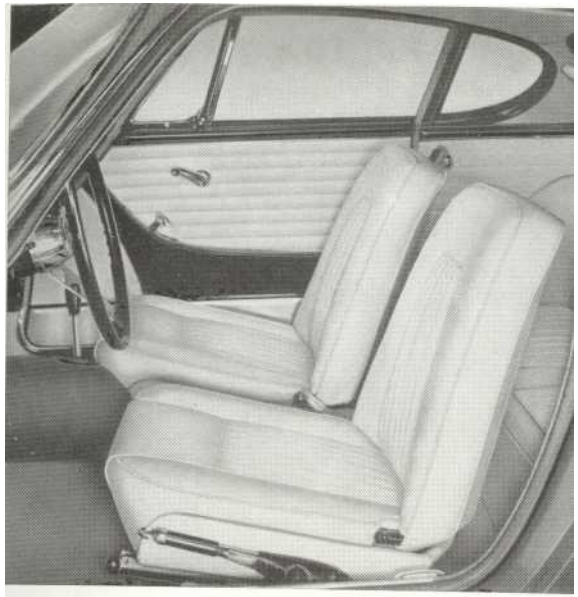

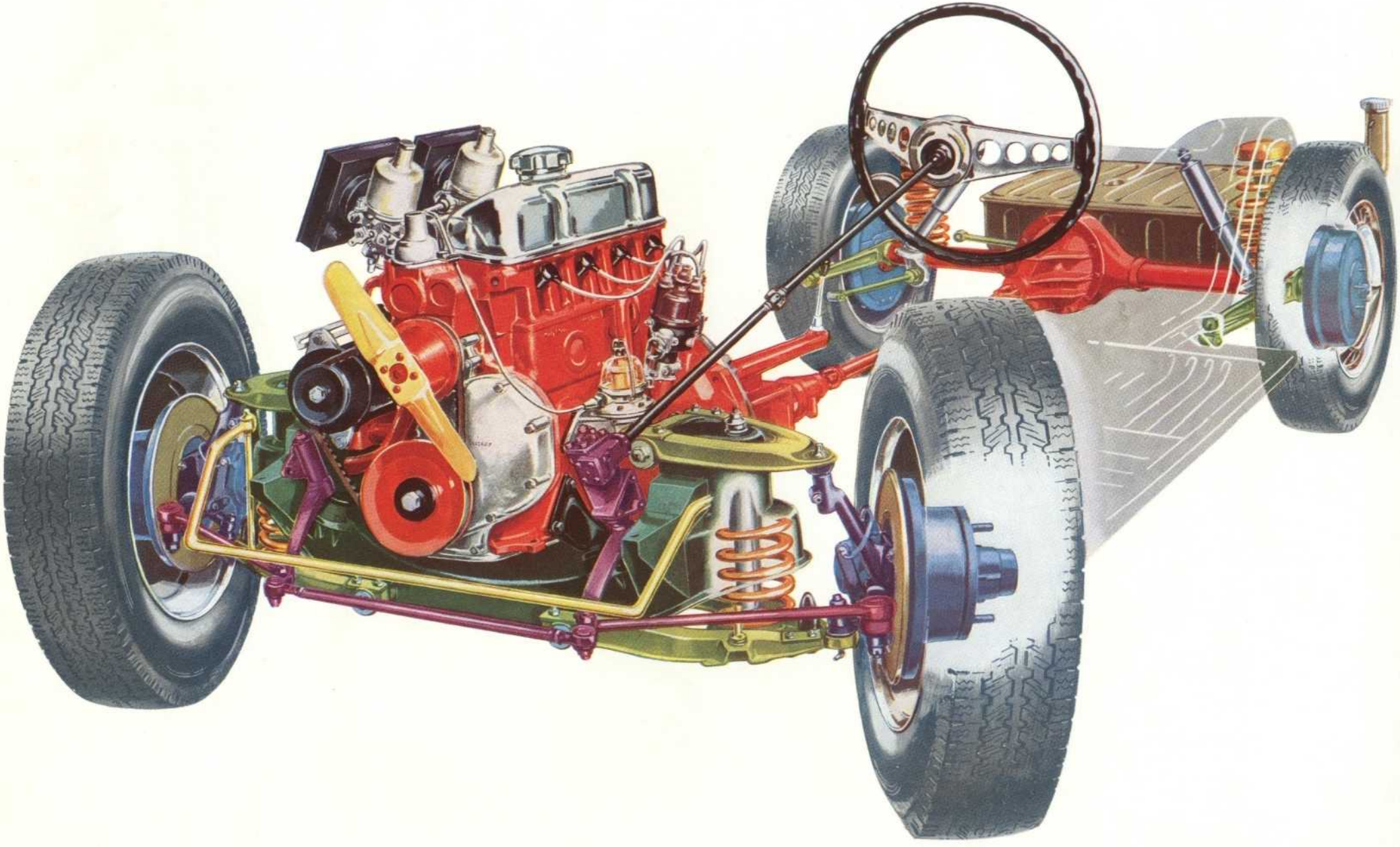

specifications P 1800

Engine
Four-cylinder, overhead valve
Bore ..... 3.312″ (84.14 mm)
Stroke ..... 3.15″ (80 mm)
Capacity ..... 108.6 cu.in. (1.78 litres)
Compression ratio 9.5:1
Max. output ..... 100 h.p. (SAE) at 5,500 r.p.m.
Max. torque ..... 108 lb.ft. (15 kgm) at 4,000 r.p.m.
Carburetters ..... Twin horizontal carburetters
Full-flow oil filter .... Standard
Oil cooler ..... Standard

Battery
Voltage ..... 12 V
Capacity ..... 58 amp./hrs.

Dynamo
Fan-cooled with automatic voltage control
Output ..... 360 W

Starter motor
Output ..... 1 h.p.
Starter switch incorporated in ignition switch which has also a special position whereby all the electrical equipment can be used even when the engine is switched off.
There is a thief-proof armoured cable between the ignition switch and the ignition coil.

Clutch
Hydraulically operated 8½″ single dry plate clutch.

Gearbox
Four-speed, fully synchronized
Ratios 1st 3.13:1
" 2nd 1.99:1
" 3rd 1.36:1
" 4th 1:1
" ..... Reverse 3.25:1

Overdrive
(Optional extra)
Electrically operated
Ratio 0.756:1

Propeller shaft
Divided for vibration-free operation. Centre bearing carried in rubber blocks as insulation from sound and vibration. Ball bearing in centre bearing requires no lubrication.

Rear axle
Hypoid type final drive
Ratio 4.1:1
When overdrive fitted
Ratio 4.56:1

Steering gear
Cam and roller type
Steering box ratio 15.5:1
Left lock to right lock .. 3¼ turns of steering wheel
Turning circle ..... approx. 31 ft. (9.5 m)

Front wheel suspension
Independent suspension with coil springs and control arms. The control arms are carried in rubber bushings and ball joints. Stabilizer.

Rear wheel suspension
Coil springs above rear axle
Support arms carried in rubber
Torque rods
Track bar

Shock absorbers
Double-acting, hydraulic, telescopic shock absorbers.
To ensure constant damping action even when driving at high speed on bad roads, each shock absorber has a freon-filled nylon cell.

Foot brake
Servo-brake with 5½″ servo cylinder
Front:
Disc brakes of three cylinder type, splash-protected and self-adjusting.
Brake discs ..... 10⅞″ × ½″
Brake friction area on each front wheel ..... 14.5 sq.in. (92.5 sq.cm.)
Rear:
V-type drum brakes (leading and trailing), hydraulic and self-centring.
Size ..... 9 × 2″
Brake friction area on each rear wheel ..... 32.5 sq.in. (210 sq.cm.)

Hand brake
Operates separately on rear wheels.
Hand brake lever located beside driving seat.

Wheels and tyres
Pressed steel wheels (4½ J × 15)
Braced-tread, sports tyres 165-15.

Body
Integral construction, all-welded, steel body, fully rust-proofed.

Fuel tank
Capacity ..... 10 Imp. gallons (12 US galls. = 45 litres)

Lighting equipment
Headlight flasher operated by direction indicator lever.
Flasher type direction indicators front and rear.
Combined stop and tail lights with built-in reflectors.
The internal lighting goes on when either of the doors is opened.
Instrument lighting, rheostat-controlled.

Instrumentation
See centre spread

Main dimensions and weight
Wheelbase ..... 96½″ (2450 mm)
Track, front ..... 51¾″ (1315 mm)
Track, rear ..... 51¾″ (1315 mm)
Overall length ..... 173¼″ (4400 mm)
Overall width ..... 67″ (1700 mm)
Overall, height, unladen 50½″ (1285 mm)
Ground clearance, approx. 6″ (155 mm)
Kerb weight, approx. .. 2490 lb. (1130 kg)

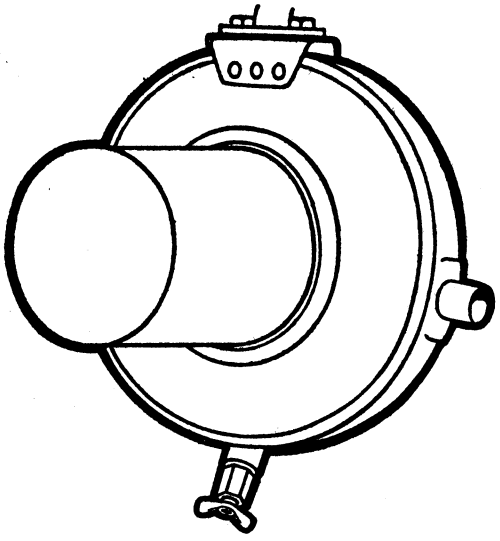

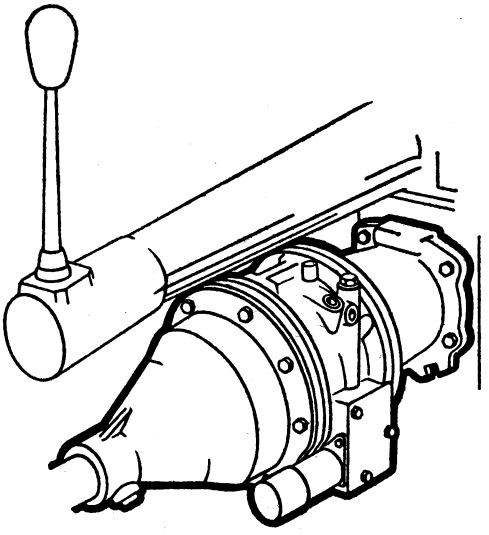

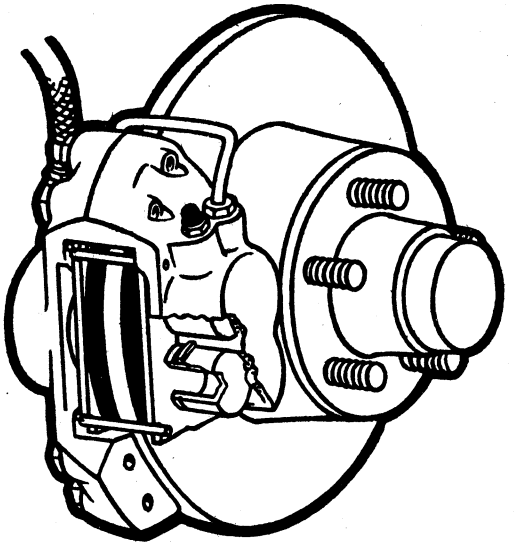

Other standard equipment

Twin horns and loud-tone horn.
Self-parking, two-speed, electric windscreen wipers.
Electric windscreen washers.
Thermostat-controlled fresh air heater.
Separate defroster control.
Two separate fresh air intakes for summer ventilation.
Safety belts.
Padded sun vizors and dashboard,
Ashtray.
Cigarette lighter
Spare wheel,
Tool kit.

The factory reserves the right to modify prices, design and equipment.

Full-flow oil filter and oil cooler

A full-flow oil filter cleans the lubricating oil effectively and makes possible considerably longer periods between oil changes. The P 1800 has also an oil cooler as standard. An extra loop from the cooling system passes through the oil cooler and keeps the oil within the temperature range for which the lubricating properties are best.

Overdrive

An electrically-operated overdrive is available as optional extra and is controlled by means of a switch on the instrument panel.
When the overdrive is cut in, engine speed is reduced and this decreases stress on the engine, gives good fuel economy and lower engine noise level.

Disc brakes

The Volvo P 1800 has liberally dimensioned disc brakes on the front wheels.
The disc brakes always have the same smooth and positive braking effect no matter whether the speed of the car is high or low. Brake fade is eliminated in the case of repeated and intermittent braking due to the outstanding heat-conducting properties of the brake units.

Printed in Sweden. RK 118/3 8.61.15000.
Oscar Isacsons Boktryckeri AB Goteborg 1961.

P1800

P 1800

SVERIGE SWEDEN SCHWEDEN SUÈDE SUECIA SVEZIA ZWEDEN

AB VOLVO *Göteborg*